ALUMINUM EXTRUSION

C & T (USA) CORP.

4014 1st AVE. BROOKLYN, NY 11232 TEL:(718)381-8828 FAX:(718)381-8858
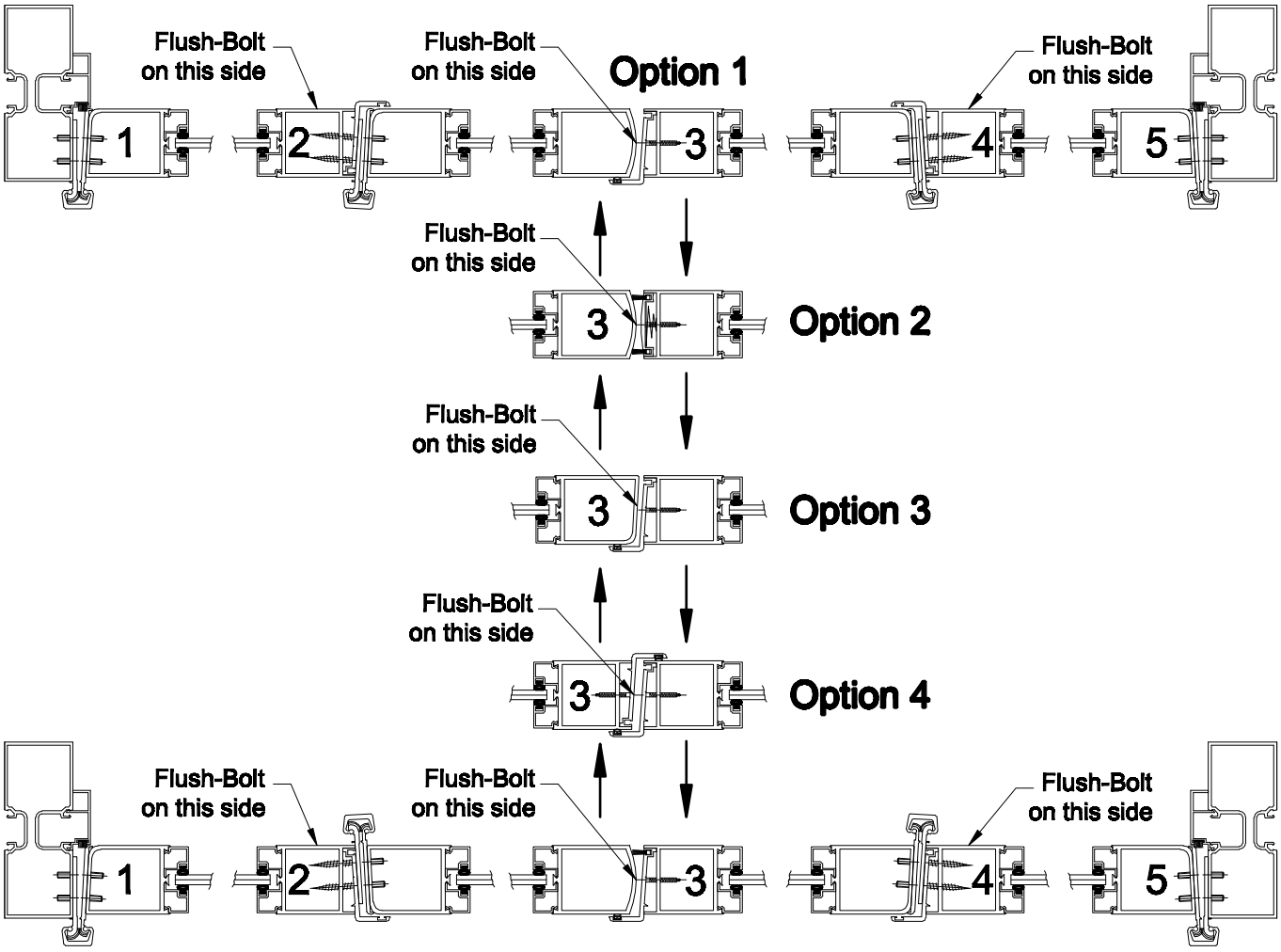
BF4100 - Bi-Fold Door
Section Detail